PALMER INSTRUMENTS, INC.

Model PST500 • PST550
Solar Digital Industrial Thermometers

Model PST500

PST500 Solar Digital Thermometer
PST550 Solar Digital Thermometer with Transmitter

NEW! Palmer PST Solar Digital Industrial Thermometers are environmentally friendly mercury-free thermometers. Palmer Thermometers set industry standards for accuracy, quality, and rugged operation. These new thermometers offer 1% accuracy and are designed and constructed for long-term service.

Transmitter: Single unit allows for local reading and remote transmitting. Dual sensors offer convenient and reliable independent operation for a variety of applications.

Flex Angle Adjustment: Just one screw permits cases to be rotated 180° and stem to be positioned in 10° increments. Users can "infinitely" adjust thermometers to virtually any viewing angle required.

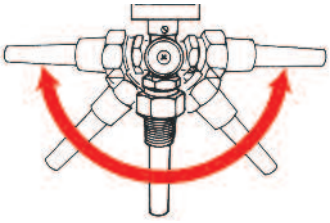

Easy Readability: Large digital display can be seen from a distance.

Self Powered: No need for batteries.

	PST500	PST550
	Solar Powered Digital Thermometer	
Output	NA	4-20mA Transmitter
Case	Hi-Impact ABS Case, All Angle Adjustable	
Range	-50° to 300°F (-45° to 150°C) F & C Switchable	
Display	1/2" LCD digits, wide ambient formula	
Accuracy	1% of reading or 1°, whichever is greater	
Resolution	1/10° between -19.9° to 199.9°F (-28° to 93°C)	
Recalibration	Through case potentiometer adjustment	
Lux Rating	10 Lux (one foot candle)	
Update	10 seconds	
Ambient Temperature	-30° to 140°F (-35° to 60°C)	
Ambient Temp Error	Zero	
Humidity	100%	
Sensor	Glass passivated Thermistor - NTC	Thermistor based - NTC
Stem Material	Standard Cast Aluminum Stem and Seat	
Fitting	1-1/4" - 18 UNEF machined Brass Swivel Nut	
Stem Assemblies	Industrial, Bimetalic, Air Duct	
Transmitter		
Range	NA	-58° to 302°F (-50° to 150°C)
Output	NA	4-20 mA
Ambient Operating Temp	NA	-15° to 185°F (-25° to 85°C)
Ambient Error	NA	0.01% Span (°C)
Supply	NA	8 to 35 VDC
Max Load Resistance	NA	775W with 24VDC Supply
Accuracy	NA	0.1% of Span
Sensor	NA	Platinum 100WRTD

TRACEABLE TO NIST

MADE IN THE USA

ONE YEAR 1 WARRANTY

Direct Replacement for Industrial Glass and Bimetal Thermometers.

Calibration Services Available

Model PST500 • PST550
Solar Industrial Digital Thermometers

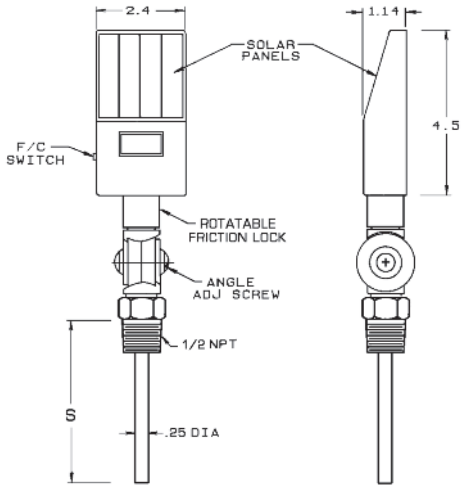

Bimetal Stem Assembly
PST500BM

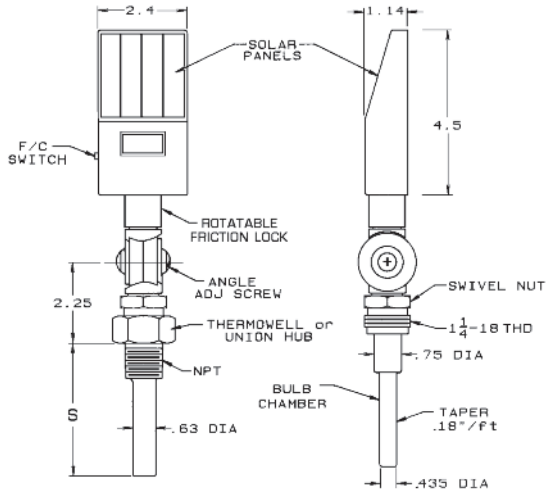

Industrial Stem Assembly
PST500IG

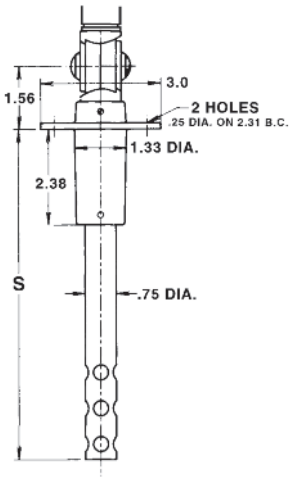

Air Duct Stem Assembly
PST500AD and PST550AD

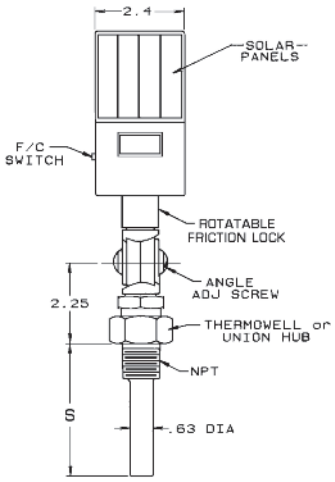

Transmitter
Industrial Stem
PST550IG

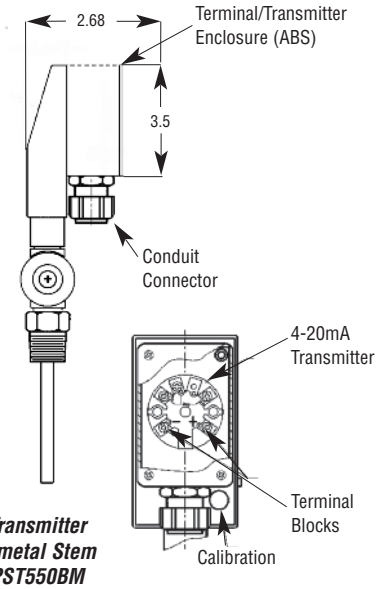

Transmitter
Bimetal Stem
PST550BM

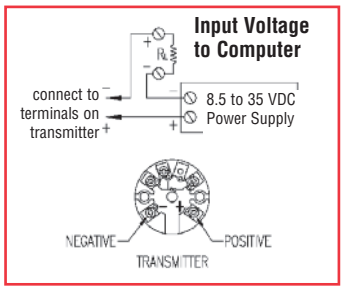

For RL = 250Ω			
V VOLT	I mA	°F	°C
1	4	-58	-50
5	20	+302	+150

Compatible with most building automation systems with 4-20mA input

Model PST550

Model Number Selection						
	Solar Thermometer			Solar Thermometer with Transmitter		
Stem Length	Bimetal	Industrial	Air Duct	Bimetal	Industrial	Air Duct
2.5”	PST500BM025[1]	NA	NA	PST550BM025	NA	NA
3.5”	NA	PST500IG035[2]	NA	NA	PST550IG035	NA
4”	PST500BM040[1]	NA	NA	PST550BM040	NA	NA
6”	PST500BM060[1]	PST500IG060[2]	PST500AD060	PST550BM060	PST550IG060	PST550AD060
9”	NA	NA	PST500AD090	NA	NA	PST550AD090
12”	NA	NA	PST500AD120	NA	NA	PST550AD120

Bimetallic: Full conformance with ASME B40.3 - 1990. Fully interchangeable with Bimetallic Dial Thermometers
Industrial Glass: Full conformance with Fed Spec GG-T-321D. Fully interchangeable with Industrial Glass Thermometers
[1] Sockets available. [2] without Socket

ONE YEAR 1 WARRANTY

TRACEABLE TO NIST

MADE IN THE USA

PALMER Wahl INSTRUMENTATION GROUP
Continued Innovation Since 1836
ISO 9001:2008 CERTIFIED

(800) 421-2853 • FAX (828) 658-0728 • www.palmerwahl.com

PW1151
08/13